Compact cylinders CDC, ISO 21287, Clean Design

Compact cylinders CDC, ISO 21287, Clean Design

Key features

Design

- With the CDC (Clean Design Compact) cylinder series, the ADN modular system has been expanded to include an easy to clean compact cylinder variant
- It is based on ISO 21287 for compact cylinders and, like the compact cylinder ADN, features short strokes and a compact design
- The compact cylinder CDC is designed as a double-acting pneumatic cylinder with piston, piston rod and profile barrel

Easy to clean

- Clean Design means smooth surfaces without slots and edges, which means fewer places where dirt can collect
- For hygiene reasons, the threads on the cylinder caps should be sealed with suitable blanking screws
- Resistant to conventional cleaning agents
- Increased corrosion protection

Easy to assemble

- Comprehensive range of mounting accessories for just about every type of installation
- Contactless position sensing via proximity sensors

Versatile

- The variants can be configured according to individual needs thanks to the modular product system
- Greater flexibility thanks to the wide range of variants

Variants

CDC-...
- ∅ 20, 25 mm
- Without position sensing

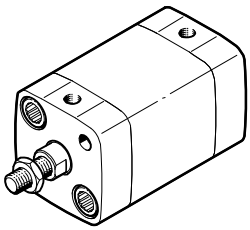

CDC-...-A...-R
- ∅ 32 ... 80 mm
- With position sensing integrated in the end positions

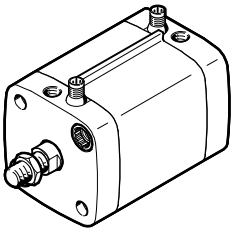

CDC-...-A-R
- ∅ 32 ... 80 mm
- With sensor mounting rail for external position sensing

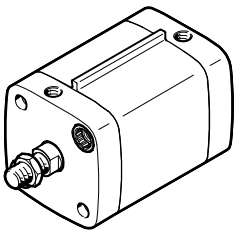

Note

A combination of integrated and external position sensing is possible.

Mounting options

With through screws

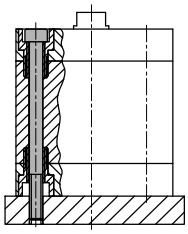

Direct mounting

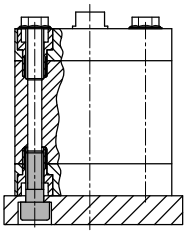

Size

Space savings of up to 50% compared with cylinders to standard ISO 15552

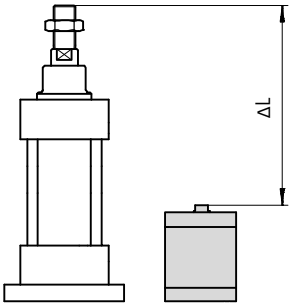

Compact cylinders CDC, ISO 21287, Clean Design

Peripherals overview

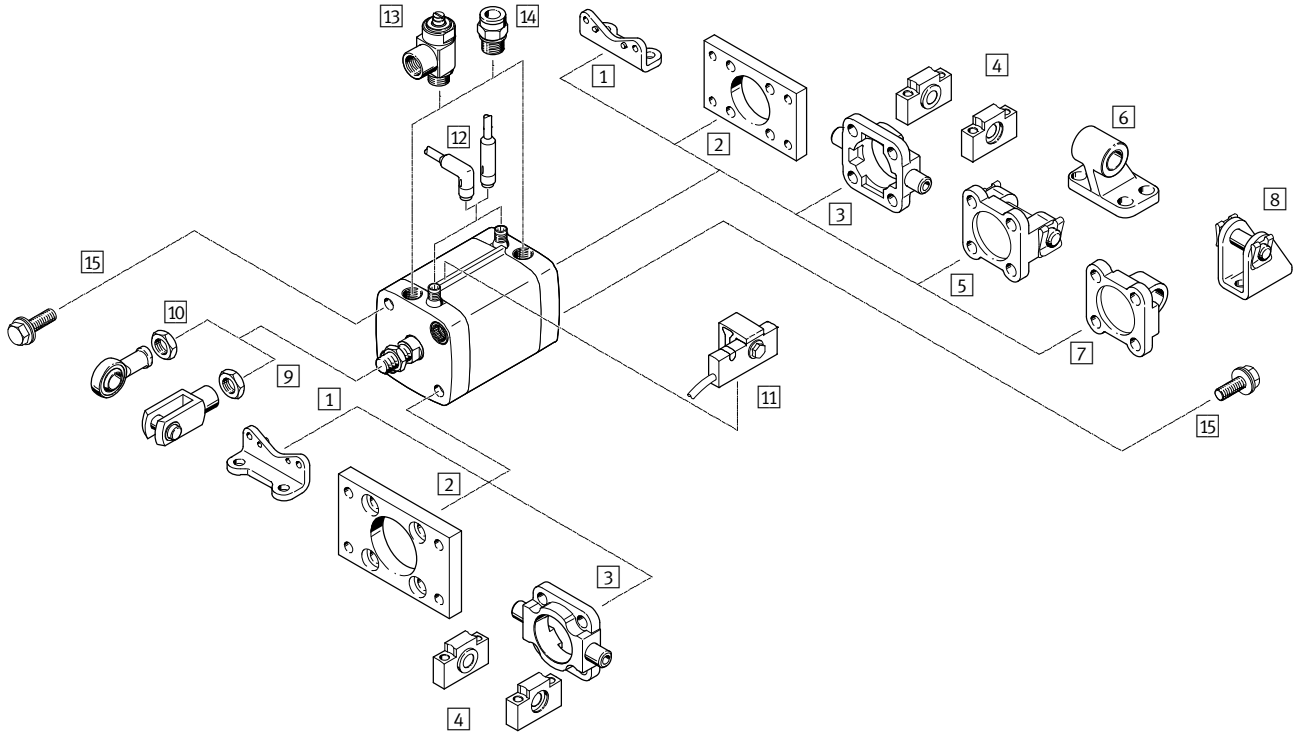

Mounting attachments and accessories			
		Description	➔ Page/Internet
1	Foot mounting HNA-...-R3	For bearing and end cap	16
2	Flange mounting CRFNG	For bearing or end cap	17
3	Trunnion flange CRZNG	For bearing or end cap in combination with trunnion supports CRLNZG	18
4	Trunnion supports CRLNZG	For trunnion flange CRZNG	18
5	Swivel flange SNCB- ... -R3	For end cap	19
6	Clevis foot mounting CRLNG	For swivel flange SNCB- ... -R3	19
7	Swivel flange SNCL- ... -R3	For end cap	20
8	Clevis foot mounting CRLBN	For swivel flange SNCL- ... -R3	20
9	Rod clevis CRSG	Permits a swivelling movement of the cylinder in one plane	23
10	Rod eye CRSGS	With spherical bearing	23
11	Proximity sensor SMT-C1	For attachment to the sensor mounting rail	21
12	Cable with socket SIM-K- ... -CDN	For electrical signal transmission and power supply	21
13	One-way flow control valve CRGRLA	For regulating speed	23
14	Push-in fittings NPQH/NPQH-L/CRQS/CRQSL	For connecting compressed air tubing with standard external diameters	22
15	Blanking screws DAMD-P- ...	For covering unused mounting threads	23

Compact cylinders CDC, ISO 21287, Clean Design

Type codes

CDC	–	32	–	50	–	A	–	P	–	AIB	–	SME	–	R	–	K2

Type	
Double-acting	
CDC	Compact cylinder, Clean Design

Piston ∅ [mm]

Stroke [mm]

Piston rod thread	
A	Male thread
I	Female thread

Cushioning	
P	Flexible cushioning rings/pads at both ends

Position sensing	
A	For proximity sensor
AIB	At both ends, integrated
AIV	Front, integrated
AIH	Rear, integrated

Proximity sensor	
SME	Contacting (magnetic reed)

Sensor mounting rail	
R	For external position sensing (only with ∅ 32 … 80 mm)

Variant	
S2	Through piston rod
K2	Extended male piston rod thread
K5	Piston rod with special thread
K8	Extended piston rod
S6	Heat-resistant seals for temperatures up to 120 °C

Compact cylinders CDC, ISO 21287, Clean Design

Technical data

Function

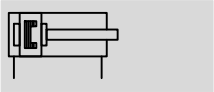

Diameter
20 … 80 mm

Stroke length
1 … 500 mm

www.festo.com

Variants

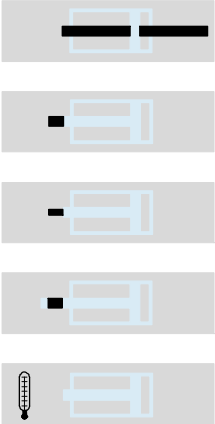

S2

K2

K5

K8

S6

CDC-…-A-P

CDC-…-A-P-R

General technical data								
Piston ∅		20	25	32	40	50	63	80
Pneumatic connection		M5	M5	G1/8	G1/8	G1/8	G1/8	G1/8
Piston rod thread		M8	M8	M10x1.25	M10x1.25	M12x1.25	M12x1.25	M16x1.5
Design		Piston						
		Piston rod						
		Cylinder barrel						
Cushioning		Flexible cushioning rings/pads at both ends						
Position sensing	A	For proximity sensor						
	AIB	At both ends, built-in						
	AIV	Front, built-in						
	AIH	Rear, built-in						
Type of mounting		Via through-hole						
		With female thread						
		Via accessories						
Mounting position		Any						

Operating and environmental conditions								
Piston ∅			20	25	32	40	50	63	80
Operating medium			Compressed air in accordance with ISO 8573-1:2010 [7:4:4]						
Note on operating/pilot medium			Operation with lubricated medium possible (in which case lubricated operation will always be required)						
Operating pressure		[bar]	0.8 … 10		0.6 … 10				
	S2	[bar]	1.2 … 10		1 … 10			0.8 … 10	
	S6	[bar]	1 … 10	0.6 … 10					
Ambient temperature[1]		[°C]	−20 … +80						
	S6	[°C]	0 … +120						
Food safe[2]			See supplementary material information						
Corrosion resistance class CRC[3]			3						

1) Note operating range of proximity sensors
2) Additional information www.festo.com/sp ➔ Certificates.
3) Corrosion resistance class CRC 3 to Festo standard FN 940070
High corrosion stress. Outdoor exposure under moderate corrosive conditions. External visible parts with primarily functional requirements for the surface and which are in direct contact with a normal industrial environment.

Forces [N] and impact energy [J]								
Piston ∅		20	25	32	40	50	63	80
Theoretical force at 6 bar, advancing		188	295	483	754	1178	1870	3016
	S2	141	247	415	686	1057	1750	2827
Theoretical force at 6 bar, retracting		141	247	415	686	1057	1750	2827
Max. impact energy at the end positions		0.2	0.3	0.4	0.7	1	1.3	1.8
	S6	0.1	0.15	0.2	0.35	0.5	0.65	0.9

Permissible impact velocity:

$$v_{perm.} = \sqrt{\frac{2 \times E_{perm.}}{m_{dead} + m_{load}}}$$

Maximum permissible load:

$$m_{load} = \frac{2 \times E_{perm.}}{v^2} - m_{dead}$$

$v_{perm.}$ Permissible impact velocity
$E_{perm.}$ Max. impact energy
m_{dead} Moving load (drive)
m_{load} Moving work load

Note

These specifications represent the maximum values which can be reached. Note the maximum permitted impact energy.

Max. lateral force Fq as a function of projection X

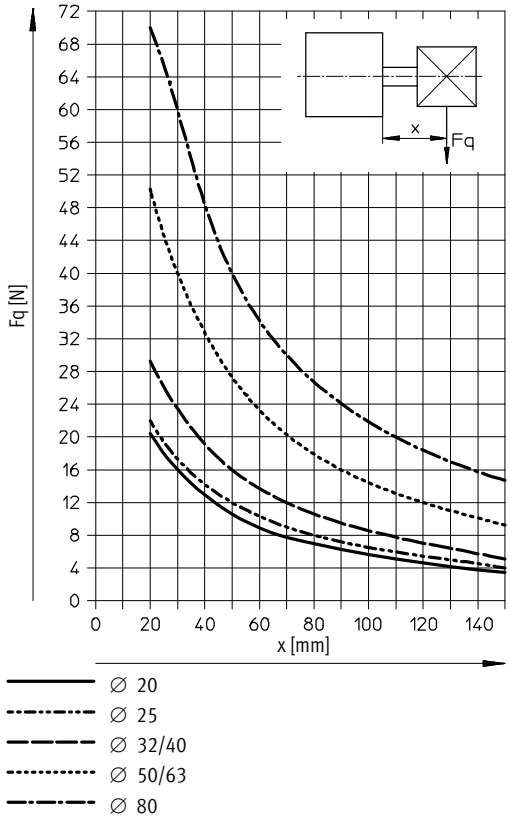

Weights [g]							
Piston ∅	20	25	32	40	50	63	80
Basic version							
Product weight with 0 mm stroke	133	170	277	377	567	790	1475
Additional weight per 10 mm stroke	20	23	31	35	52	59	84
Moving load with 0 mm stroke	24	33	53	82	128	177	367
Additional load per 10 mm stroke	6	6	9	9	16	16	25
S2 – Through piston rod							
Product weight with 0 mm stroke	150	183	296	386	600	827	1507
Additional weight per 10 mm stroke	26	29	40	44	67	74	109
Moving load with 0 mm stroke	34	40	64	81	144	195	367
Additional load per 10 mm stroke	12	12	18	18	32	32	49

Materials

Sectional view

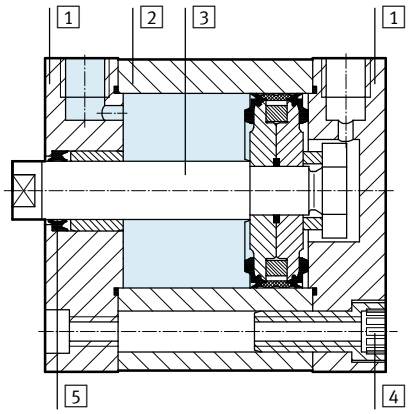

Compact cylinder		Basic version	S6
1	End cap	Anodised aluminium	
2	Cylinder barrel	Anodised aluminium	
3	Piston rod	High-alloy steel	
4	Flange screws	Corrosion-resistant steel	
–	Seals	TPE-U (PUR) media sealing (modified for resistance to hydrolysis and cleaning agents)	FPM
–	Note on materials	Free of copper and PTFE	
		–	Contains PWIS (paint-wetting impairment substances)

Dimensions Download CAD data ➔ **www.festo.com**

Basic version

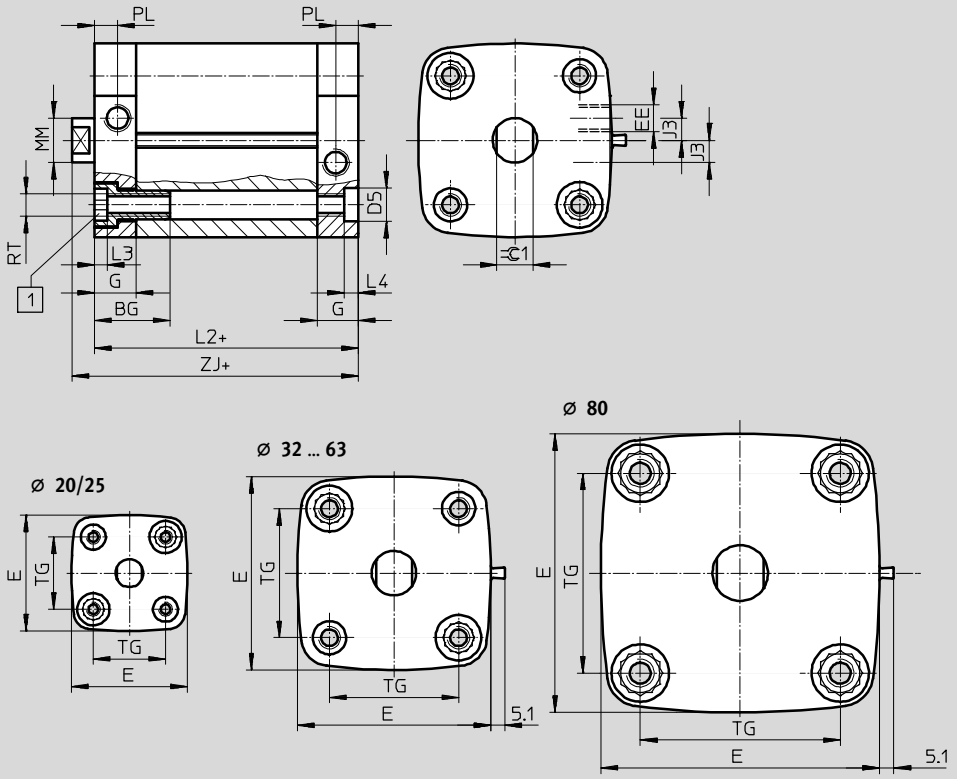

1 Socket head screw with female thread for mounting attachments

\+ = plus stroke length

With position sensing integrated in the end positions

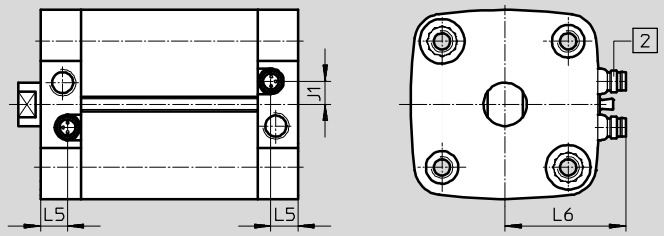

1 Miniature plug connector, 3-pin, with integrated proximity sensor (order code SME) suitable for cable with socket SIM-K-...-CDN

Projection of blanking screw

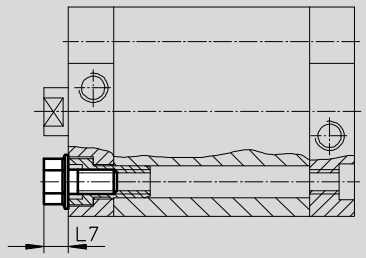

∅ [mm]	BG	D5 F9	E	EE	G	J1 ±0.1	J3 ±0.1	L2	L3	L4
20	19.5	9	36.8	M5	12	–	–	37	4.4	5
25			41.8					39		
32	26		49.8	G1/8	15	5.8	7	44		
40			57.8			8	8	45		
50	27	12	69.7			8.5				
63			81.3			12		49		
80		–	100.4		16.5	15		54	8	–

∅ [mm]	L5	L6 ±2	L7	MM ∅ h8	PL ±0.1	RT	TG	ZJ +1	⌀1 h13
20	–	–	7	10	6	M5	22	42.7	9
25							26	44.7	
32	10	35	8.7	12	8.2	M6	32.5	50.2	10
40		39					38	51.2	
50		45	10.3	16		M8	46.5	53.2	13
63		50					56.5	57.2	
80	11.5	60	11.9	20		M10	72	63	17

Note

The following maximum stroke lengths apply in combination with a swivel mounting on the end cap:

∅ [mm]	20	25	32	40	50	63	80
Max. stroke length	50		100				150

Dimensions – Variants Download CAD data ➔ **www.festo.com**

Basic version

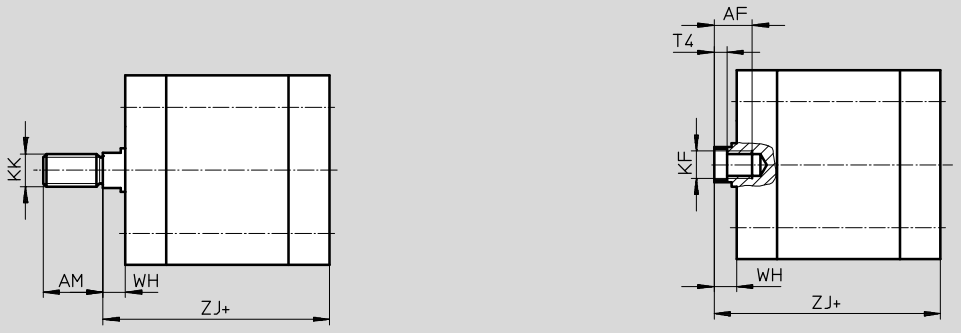

+ = plus stroke length

S2 – Through piston rod

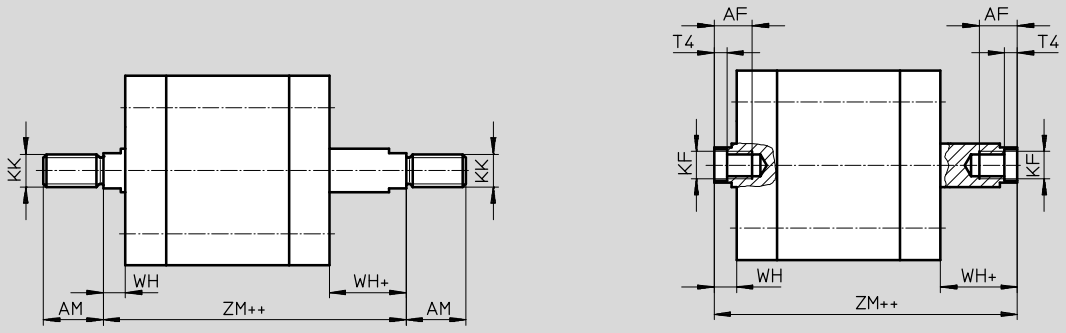

++ = plus 2 stroke lengths

K2 – Extended male piston rod thread

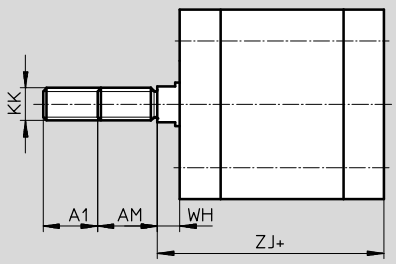

+ = plus stroke length

∅ [mm]	A1	AF min.	AM –0.5	KF	KK	T4	WH +1	ZJ +1	ZM
20	1 … 20	14	16	M6	M8	2.6	5.7	42.7	49.8
25								44.7	51.8
32		16	19	M8	M10x1.25	3.3	6.2	50.2	57.8
40								51.2	58.9
50		20	22	M10	M12x1.25	4.7	8.2	53.2	63.1
63								57.2	66.9
80	1 … 30		28	M12	M16x1.5	6.1	9	63	73.5

Dimensions – Variants Download CAD data ➔ **www.festo.com**

K5 – Special thread on piston rod

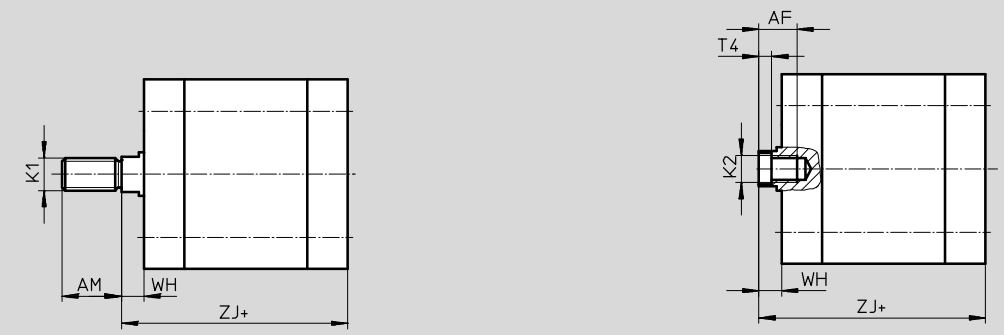

+ = plus stroke length

K8 – Extended piston rod

+ = plus stroke length

∅ [mm]	AF min.	A2	AM −0.5	K1	K2	T4	WH +1	ZJ +1
20	14	1 … 300	16	M10, M10x1.25	M5	2.6	5.7	42.7
25								44.7
32	16	1 … 400	19	M10, M12	M6	3.3	6.2	50.2
40								51.2
50	20		22	M12, M12	M8	4.7	8.2	53.2
63								57.2
80		1 … 500	28	M16, M20	M10	6.1	9	63

Proximity sensor, magnetic reed
(order code SME)

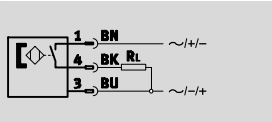

Note

The proximity sensor can only be ordered in conjunction with the order code AIB, AIV and AIH (integrated position sensing) in the modular product system.

Technical data		
General information		
Design		Integrated
Based on standard		EN 60947-5-2
CE mark (see declaration of conformity)		To EU EMC Directive
Note on materials		Free of copper and PTFE
Input signal/measuring element		
Measuring principle		Magnetic reed
Ambient temperature	[°C]	–20 … +60
Switching output		
Switching output		Contacting, bipolar
Switching element function		N/O contact
Reproducibility of switching point	[mm]	±0.1
Hysteresis	[mm]	1 … 4, depending on the cylinder used
Switch-on time	[ms]	0.5
Switch-off time	[ms]	0.5
Max. output current	[mA]	500
Max. switching capacity AC	[W]	10 VA
Max. switching capacity DC	[W]	10 W
Inductive protective circuit		Adapted to MZ coil with LED
Residual current	[mA]	0
Output, further data		
Protection against short circuit		No
Protection against overloading		No
Electronic components		
Operating voltage range	[V AC]	12 … 30
	[V DC]	12 … 30
Protection against polarity reversal		No
Electromechanical components		
Electrical connection		Plug, M8x1, 3-pin
Connection direction		Lateral
Information on crimp connector materials		Gold-plated brass

Technical data		
Mechanical components		
Tightening torque	[Nm]	0.3
Mounting position		Any
Product weight	[g]	2.7
Information on housing materials		Polyamide, epoxy resin, nickel-plated brass
Display/operation		
Switching status display		Yellow LED
Immissions/emissions		
Degree of protection		IP65, IP67 to EN 60529
		IP69K, to DIN 40050 Part 9
		Only in conjunction with plug socket with cable SIM-K-...-CDN
Corrosion resistance class CRC[1)]		3

1) Corrosion resistance class CRC 3 to Festo standard FN 940070
High corrosion stress. Outdoor exposure under moderate corrosive conditions. External visible parts with primarily functional requirements for the surface and which are in direct contact with a normal industrial environment.

Compact cylinders CDC, ISO 21287, Clean Design

Ordering data – Modular products

FESTO

Ordering table

	Size	20	25	32	40	50	63	80	Condi-tions	Code		Enter code
M	Module No.	**543305**	**543306**	**543307**	**543308**	**543309**	**543310**	**543311**				
	Function	Standard cylinder, double-acting, based on ISO 21287 (Clean Design)								**CDC**		CDC
	Piston ∅ [mm]	20	25	32	40	50	63	80		**-...**		
	Stroke [mm]	1 ... 300		1 ... 400				1 ... 500		**-...**		
	Piston rod thread	Male thread								**-A**		
		Female thread							1	**-I**		
	Cushioning	Flexible cushioning rings/pads at both ends								**-P**		-P
	Position sensing	Without position sensing		–	–	–	–	–				
		–	–	For proximity sensor						**-A**		
		–	–	At both ends, integrated					2	**-AIB**		
		–	–	Front, integrated					2	**-AIV**		
↓		–	–	Rear, integrated					2	**-AIH**		

1 **I** Not with extended male thread K2

2 **AIB, AIV, AIH** Only with proximity sensor SME, SMT

M Mandatory data
O Options

Transfer order code

	CDC	–		–		–		–	P	

Compact cylinders CDC, ISO 21287, Clean Design

Ordering data – Modular products

FESTO

Ordering table

Size		20	25	32	40	50	63	80	Conditions	Code		Enter code
O	Proximity sensor	–	–	SME (contacting)					3	**-SME**		
	Sensor mounting rail	–	–	Sensor mounting rail for external position sensing					4	**-R**		
	Type of piston rod	Through piston rod								**-S2**		
	Male thread extended [mm]	Extended male piston rod thread 1 … 20						1 … 30		**-…K2**		
	Piston rod with special thread – Male thread	M10x1.25 M10		M10 M12		M12 M16		M16 M20		**-"…"K5**		
	Piston rod with special thread – Female thread	M5		M6		M8		M10				
	Piston rod extended [mm]	Extended piston rod 1 … 300		1 … 400				1 … 500	5	**-…K8**		
	Temperature resistance	Heat-resistant seals for temperatures up to 120 °C							6	**-S6**		

3 **SME** Only with position sensing AIB, AIV, AIH
Minimum stroke 15 mm

4 **R** Must be selected with size 32, 40, 50, 63, 80

5 **K8** The sum of the stroke length and piston rod extension must not exceed the maximum permissible stroke length

6 **S6** Not with position sensing AIB, AIV, AIH

M Mandatory data
O Options

Transfer order code

– [ ] – [ ] – [ ] – [ ] – [ ] – [ ] – [ ] – [ ]

Foot mounting HNA-...-R3

Material:
Steel with protective coating
Free of copper and PTFE
RoHS-compliant

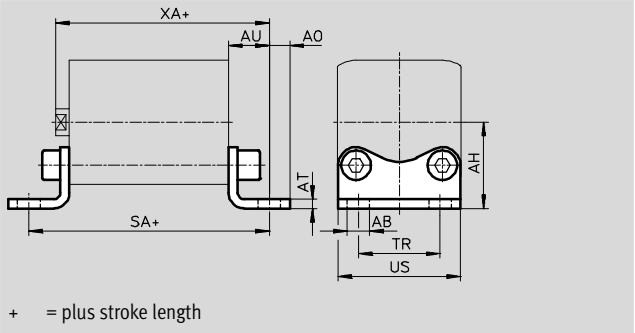

Dimensions and ordering data

For ∅ [mm]	AB ∅ H14	AH JS14	AO	AT ±0.5	AU ±0.2	SA	TR ±0.2
20	7	27	6.25	4	16	69	22
25		29				71	26
32		33.5	7			76	32
40	10	38	9		18	81	36
50		45	8	5	21	87	45
63		50				91	50
80	12	63	10.5	6	26	106	63

For ∅ [mm]	US –0.5	XA	CRC[1]	Weight [g]	Part No.	Type
20	34.5	59	3	84	**537254**	**HNA-20-R3**
25	38.5	61	3	90	**537255**	**HNA-25-R3**
32	46	66	3	123	**537256**	**HNA-32-R3**
40	54	69	3	157	**537257**	**HNA-40-R3**
50	64	74	3	278	**537258**	**HNA-50-R3**
63	75	78	3	328	**537259**	**HNA-63-R3**
80	93	89	3	634	**537260**	**HNA-80-R3**

1) Corrosion resistance class CRC 3 to Festo standard FN 940070
High corrosion stress. Outdoor exposure under moderate corrosive conditions. External visible parts with primarily functional requirements for the surface and which are in direct contact with a normal industrial environment.

Note

Screws with special lengths are required to fit the sizes ∅ 80 mm
➔ page 23

Flange mounting CRFNG

Material:
High-alloy steel
Free of copper and PTFE

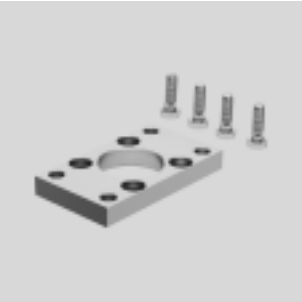

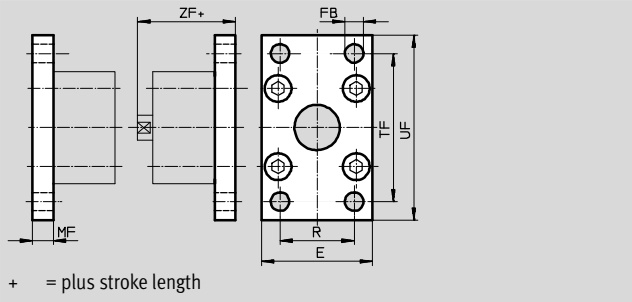

Dimensions and ordering data						
For ∅ [mm]	E	FB ∅ H13	MF	R	TF	UF
32	45	7	10	32	64	80
40	54	9	10	36	72	90
50	65	9	12	45	90	110
63	75	9	12	50	100	120
80	93	12	16	63	126	150

Dimensions and ordering data					
For ∅ [mm]	ZF	CRC[1]	Weight [g]	Part No.	Type
32	54	4	220	**161846**	**CRFNG-32**
40	55	4	291	**161847**	**CRFNG-40**
50	57	4	526	**161848**	**CRFNG-50**
63	61	4	680	**161849**	**CRFNG-63**
80	70	4	1508	**161850**	**CRFNG-80**

1) Corrosion resistance class CRC 4 to Festo standard FN 940070
Particularly high corrosion stress. Outdoor exposure under extreme corrosive conditions. Parts exposed to aggressive media, for instance in the chemical or food industries. These applications may need to be supported by special tests (➔ also FN 940082) using appropriate media.

- Note

Screws with special lengths are required to fit the sizes ∅ 80 mm
➔ page 23

Trunnion flange CRZNG

Material:
CRZNG: Electrolytically polished special steel casting
Free of copper and PTFE
RoHS-compliant

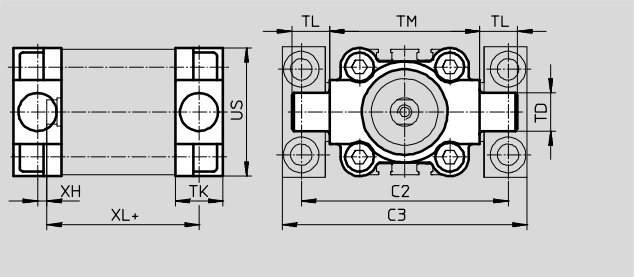

+ = plus stroke length

Dimensions and ordering data													
For ∅ [mm]	C2	C3	TD ∅ e9	TK	TL	TM	US	XH	XL	CRC[1]	Weight	Part No.	Type
32	71	86	12	16	12	50	45	2	52	4	150	**161852**	**CRZNG-32**
40	87	105	16	20	16	63	54	4	55	4	285	**161853**	**CRZNG-40**
50	99	117	16	24	16	75	64	4	57	4	473	**161854**	**CRZNG-50**
63	116	136	20	24	20	90	75	4	61	4	687	**161855**	**CRZNG-63**
80	136	156	20	28	20	110	93	5	81	4	1296	**161856**	**CRZNG-80**

1) Corrosion resistance class CRC 4 to Festo standard FN 940070
Particularly high corrosion stress. Outdoor exposure under extreme corrosive conditions. Parts exposed to aggressive media, for instance in the chemical or food industries. These applications may need to be supported by special tests (➔ also FN 940082) using appropriate media.

Note
Screws with special lengths are required to fit the sizes ∅ 80 mm
➔ page 23

Trunnion supports CRLNZG

Material:
High-alloy steel
Free of copper and PTFE
RoHS-compliant

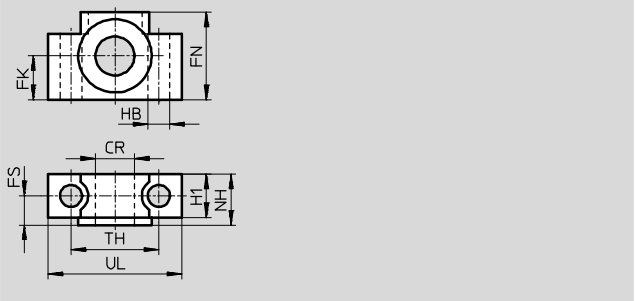

Dimensions and ordering data													
For ∅ [mm]	CR ∅ D11	FK ∅ ±0.1	FN	FS	H1	HB ∅ H13	NH	TH ±0.2	UL	CRC[1]	Weight [g]	Part No.	Type
32	12	15	30	10.5	15	6.6	18	32	46	4	205	**161874**	**CRLNZG-32**
40, 50	16	18	36	12	18	9	21	36	55	4	323	**161875**	**CRLNZG-40/50**
63, 80	20	20	40	13	20	11	23	42	65	4	435	**161876**	**CRLNZG-63/80**

1) Corrosion resistance class CRC 4 to Festo standard FN 940070
Particularly high corrosion stress. Outdoor exposure under extreme corrosive conditions. Parts exposed to aggressive media, for instance in the chemical or food industries. These applications may need to be supported by special tests (➔ also FN 940082) using appropriate media.

Swivel flange SNCB-...-R3

Material:
Die-cast aluminium with protective coating, high corrosion protection
Free of copper and PTFE
RoHS-compliant

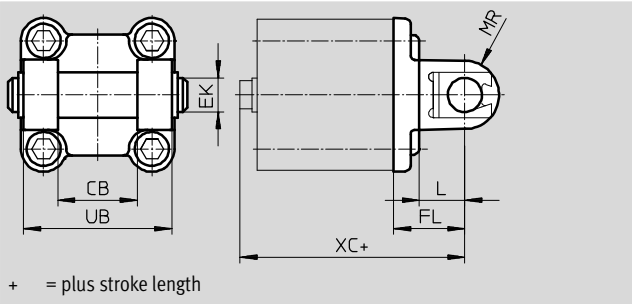

Dimensions and ordering data											
For ∅ [mm]	CB H14	EK ∅ e8	FL ±0.2	L	MR	UB h14	XC	CRC[1]	Weight [g]	Part No.	Type
32	26	10	22	13	8.5	45	72	3	100	**176944**	**SNCB-32-R3**
40	28	12	25	16	12	52	76	3	151	**176945**	**SNCB-40-R3**
50	32	12	27	16	12	60	80	3	228	**176946**	**SNCB-50-R3**
63	40	16	32	21	16	70	89	3	371	**176947**	**SNCB-63-R3**
80	50	16	36	22	16	90	99	3	632	**176948**	**SNCB-80-R3**

1) Corrosion resistance class CRC 3 to Festo standard FN 940070
High corrosion stress. Outdoor exposure under moderate corrosive conditions. External visible parts with primarily functional requirements for the surface and which are in direct contact with a normal industrial environment.

Note

Screws with special lengths are required to fit the sizes ∅ 80 mm
➔ page 23

Clevis foot CRLNG

Material:
High-alloy steel
Free of copper and PTFE

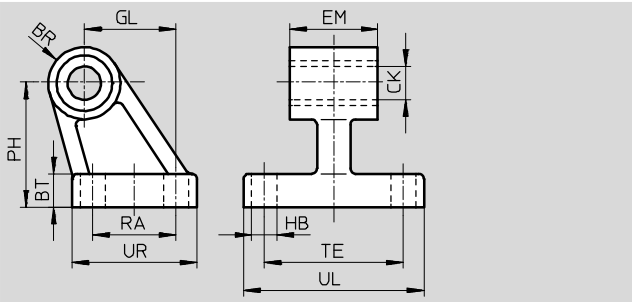

Dimensions and ordering data															
For ∅ [mm]	BR	BT	CK ∅ D11	EM −0.4	GL	HB ∅ H13	PH	RA	TE	UL	UR	CRC[1]	Weight [g]	Part No.	Type
32	10	8	10	25.8	21	6.6	32	18	38	51	31	4	120	**161840**	**CRLNG-32**
40	11	10	12	27.8	24	6.6	36	22	41	54	35	4	161	**161841**	**CRLNG-40**
50	12	12	12	31.8	33	9	45	30	50	65	45	4	281	**161842**	**CRLNG-50**
63	15	12	16	39.8	37	9	50	35	52	67	50	4	370	**161843**	**CRLNG-63**
80	15	14	16	49.8	47	11	63	40	66	86	60	4	562	**161844**	**CRLNG-80**

1) Corrosion resistance class CRC 4 to Festo standard FN 940070
Particularly high corrosion stress. Outdoor exposure under extreme corrosive conditions. Parts exposed to aggressive media, for instance in the chemical or food industries. These applications may need to be supported by special tests (➔ also FN 940082) using appropriate media.

Swivel flange SNCL-...-R3

Material:
SNCL-...-R3: Die-cast aluminium with protective coating
Free of copper and PTFE
RoHS-compliant

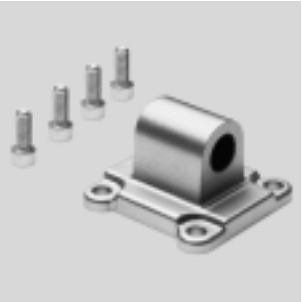

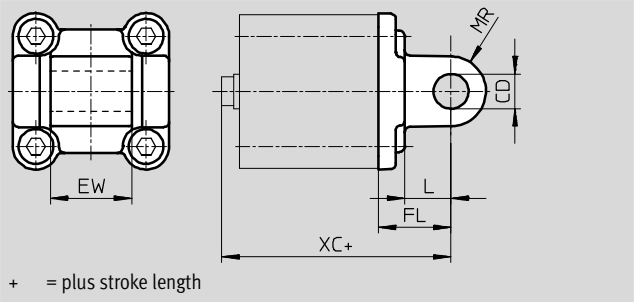

Dimensions and ordering data										
For ∅ [mm]	CD ∅ H9	EW h12	FL ±0.2	L	MR	XC	CRC[1]	Weight [g]	Part No.	Type
20	8	16	20	14	8	63	3	38	**537796**	**SNCL-20-R3**
25						65	3	41	**537797**	**SNCL-25-R3**

1) Corrosion resistance class CRC 3 to Festo standard FN 940070
High corrosion stress. Outdoor exposure under moderate corrosive conditions. External visible parts with primarily functional requirements for the surface and which are in direct contact with a normal industrial environment.

Clevis foot CRLBN, stainless steel

Material:
High-alloy steel
Free of copper and PTFE

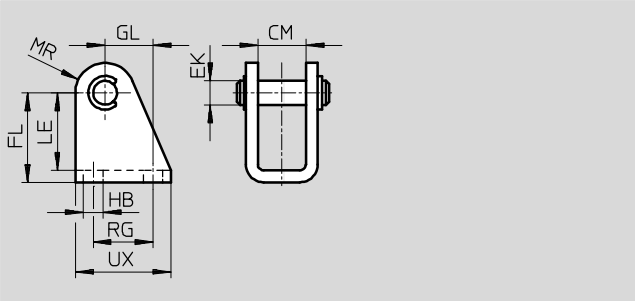

Dimensions and ordering data													
For ∅ [mm]	CM	EK ∅	FL	GL	HB	LE	MR	RG	UX	CRC[1]	Weight [g]	Part No.	Type
20/25	16.1	8	30 +0.4/−0.2	16	6.6	26	10	20	32	4	82	**161863**	**CRLBN-20/25**

1) Corrosion resistance class CRC 4 to Festo standard FN 940070
Particularly high corrosion stress. Outdoor exposure under extreme corrosive conditions. Parts exposed to aggressive media, for instance in the chemical or food industries. These applications may need to be supported by special tests (➔ also FN 940082) using appropriate media.

Ordering data – Proximity sensors for T-slot, magneto-resistive Technical data ➔ Internet: smt

	Type of mounting	Switching output	Electrical connection	Cable length [m]	Part No.	Type
N/O contact						
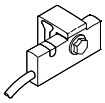	Is mounted on the mounting rail	PNP	Cable, 3-wire	5.0	**571339**	**SMT-C1-PS-24V-K-5,0-OE**
			Plug M8x1, 3-pin	0.3	**571342**	**SMT-C1-PS-24V-K-0,3-M8D**
			Plug M12x1, 3-pin	0.3	**571341**	**SMT-C1-PS-24V-K-0,3-M12**

Ordering data – Connecting cables for SMT-C1-... Technical data ➔ Internet: nebu

	Electrical connection, left	Electrical connection, right	Cable length [m]	Part No.	Type
	Straight socket, M8x1, 3-pin	Cable, open end, 3-wire	2.5	**541333**	**NEBU-M8G3-K-2.5-LE3**
			5	**541334**	**NEBU-M8G3-K-5-LE3**
	Straight socket, M12x1, 5-pin	Cable, open end, 3-wire	2.5	**541363**	**NEBU-M12G5-K-2.5-LE3**
			5	**541364**	**NEBU-M12G5-K-5-LE3**
	Angled socket, M8x1, 3-pin	Cable, open end, 3-wire	2.5	**541338**	**NEBU-M8W3-K-2.5-LE3**
			5	**541341**	**NEBU-M8W3-K-5-LE3**
	Angled socket, M12x1, 5-pin	Cable, open end, 3-wire	2.5	**541367**	**NEBU-M12W5-K-2.5-LE3**
			5	**541370**	**NEBU-M12W5-K-5-LE3**

Ordering data – Connecting cables for integrated proximity sensor Technical data ➔ Internet: sim

	Electrical connection, left	Electrical connection, right	Cable length [m]	Part No.	Type
	Angled socket, clip, 3-pin	Cable, open end, 3-wire	5	**164254**	**SIM-K-WD-5-PU**

Ordering data – Push-in fittings							Technical data ➔ Internet: qs
	Connection		Material	Weight [g]	Part No.	Type	PU[3]
	Thread	Tubing O.D.					
With external hex							
	M5	4	Brass, nickel-plated and chrome-plated	–	**578334**	**NPQH-D-M5-Q4-P10**	10
		6		–	**578335**	**NPQH-D-M5-Q6-P10**	
	G1/8	4		6.1	**578338**	**NPQH-D-G18-Q4-P10**	
		6		9	**578339**	**NPQH-D-G18-Q6-P10**	
		8		11.4	**578340**	**NPQH-D-G18-Q8-P10**	
	M5	4	Stainless steel	6	**162860**	**CRQS-M5-4**[1]	1
		6		8.4	**162861**	**CRQS-M5-6**[1]	
	R1/8	6		9.9	**162862**	**CRQS-1/8-6**[2]	
		8		12	**162863**	**CRQS-1/8-8**[2]	
With internal hex							
	M5	4	Brass, nickel-plated and chrome-plated	4.6	**578370**	**NPQH-DK-M5-Q4-P10**	10
		6		8.6	**578371**	**NPQH-DK-M5-Q6-P10**	
	G1/8	4		–	**578374**	**NPQH-DK-G18-Q4-P10**	
		6		–	**578375**	**NPQH-DK-G18-Q6-P10**	
		8		–	**578376**	**NPQH-DK-G18-Q8-P10**	

1) With sealing ring
2) With PTFE coating
3) Packaging unit quantity

Ordering data – Push-in L-fittings							Technical data ➔ Internet: qs
	Connection		Material	Weight [g]	Part No.	Type	PU[3]
	Thread	Tubing O.D.					
With external hex							
	M5	4	Brass, nickel-plated and chrome-plated	8.8	**578276**	**NPQH-L-M5-Q4-P10**	10
		6		11.9	**578277**	**NPQH-L-M5-Q6-P10**	
	G1/8	4		15.7	**578280**	**NPQH-L-G18-Q4-P10**	
		6		18.5	**578281**	**NPQH-L-G18-Q6-P10**	
		8		22	**578282**	**NPQH-L-G18-Q8-P10**	
	M5	4	Stainless steel	12	**162870**	**CRQSL-M5-4**[1]	1
		6		18	**162871**	**CRQSL-M5-6**[1]	
	R1/8	6		19	**162872**	**CRQSL-1/8-6**[2]	
		8		26	**162873**	**CRQSL-1/8-8**[2]	

1) With sealing ring
2) With PTFE coating
3) Packaging unit quantity

Ordering data – Plastic tubing, standard O.D.		Technical data ➔ Internet: tubing
		Type
	Good resistance to chemicals and hydrolysis	**PLN**
	Pneumatic tubing with resistance to high temperatures and chemicals	**PFAN**
	Approved for use in the food industry and hydrolysis-resistant	**PUN-H**

Ordering data – One-way flow control valves						Technical data ➔ Internet: crgrla
	Connection		Material	Weight [g]	Part No.	Type
	Thread	For push-in fitting				
	M5	CRQS/CRQSL/CRQST, QS	Electrolytically polished special steel casting	10,2	**161403**	**CRGRLA-M5-B**
	G⅛			37,8	**161404**	**CRGRLA-⅛-B**

Ordering data – Blanking screws, corrosion-resistant							
	For ∅	Material	CRC[1]	Weight [g]	Part No.	Type	PU[3]
	20, 25	High-alloy steel	3	5.5	**543714**	**DAMD-P-M5-10-R1**[2]	**4**
	32, 40			9	**543715**	**DAMD-P-M6-12-R1**[2]	
	50, 63			17.5	**543716**	**DAMD-P-M8-16-R1**[2]	
	80			30	**543717**	**DAMD-P-M10-16-R1**[2]	

1) Corrosion resistance class CRC 3 to Festo standard FN 940070
High corrosion stress. Outdoor exposure under moderate corrosive conditions. External visible parts with primarily functional requirements for the surface and which are in direct contact with a normal industrial environment.
2) With sealing ring
3) Packaging unit quantity

Ordering data – Corrosion and acid-resistant piston rod attachments								Technical data ➔ Internet: crsg
Designation	For ∅	Part No.	Type		Designation	For ∅	Part No.	Type
Rod eye CRSGS					Rod clevis CRSG			
	20, 25	**195581**	**CRSGS-M8**			20, 25	**13568**	**CRSG-M8**
	32, 40	**195582**	**CRSGS-M10x1,25**			32, 40	**13569**	**CRSG-M10x1,25**
	50, 63	**195583**	**CRSGS-M12x1,25**			50, 63	**13570**	**CRSG-M12x1,25**
	80	**195584**	**CRSGS-M16x1,5**			80	**13571**	**CRSG-M16x1,5**

Ordering data – Screws				
	For ∅	For accessories	Part No.	PU[1]
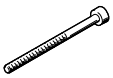	80	HNA-R3, SNCB-R3	**372622** **DIN912-M10X30-A4-70**	**1**
		CRFNG	**8028230** **DIN912-M10X30-A4-70**	
		CRZNG	**744814** **DIN912-M10X40-A4-70**	

1) Packaging unit quantity